Reg. No. | | | | | | | | | | |

[14AE45]

FOURTH SEMESTER B.TECH EXAMINATION, JUNE-2018

AEROSPACE STRUCTURES-I

Time:3 Hours **Maximum Marks:70**

Instructions:

1. Answer any **FIVE** full questions choosing at least **TWO** questions from each Part.
2. Any missing data may be suitably assumed.

PART-A

1. a. Differentiate statically determinate and indeterminate structures with an example each. **04**

b. The relative position of the centre of gravity and the centres of pressure of the wing and tailplane of an aircraft are shown in Fig 1. The total weight of the aircraft is 667.5 kN.If the fuselage and its contents weigh 26.3 kN/m and the weight of the tailplane is 8.9 kN calculate the shear force and bending moment in the fuselage at the section AA. **10**

2. a. Find the member forces OA, OB and OC for the space truss structure loaded at O with 1 kN as shown in Fig : 2a. **06**

b. A schematic Landing Gear structure in XY plane is shown in Fig.2b with brace struts pinned at both ends and support E is roller type which allows vertical movement, but horizontal movement is prevented. Landing load of 50 kN is applied at axle unit at A. Find all the internal loads in the brace struts(BE and CD) and the shock strut(AE) and mention the kind of loads (Tension/Compression/Bending...). **08**

3. a. Derive unsymmetrical bending stress (σ_z) equation for a beam cross section in XY plane subjected to bending moments Mx and My about centroidal XY axes. **06**

b. The cross section of an idealized single cell box beam with four stringers is shown in Fig.3. Stringer areas are: $A_1=6*10^{-4}$ m^2; $A_2=5*10^{-4}$ m^2; $A_3=4*10^{-4}$ m^2; $A_4=4*10^{-4}$ m^2. (Neglect contribution of the thin sheets to bending) Find the bending stress in the stringers for the following applied bending moments: **08**

Mx=-5000 Nm; My=2000 Nm.

4. a. Explain the importance of shear centre. **02**

b. Draw the shear stress distribution for the cross sections shown in Fig: 4a for a vertical shear load along the plane of symmetry. **04**

c. Calculate the position of the shear centre of the thin walled channel section shown in Fig.4b and draw the shear flow distribution for a vertical shear load, S_y applied at the shear centre. **08**

5. a. Explain structural idealization and give a theory behind idealization of a panel into direct stress carrying booms and shear only carrying webs. **06**

b. The fuselage of an aircraft has the circular cross section shown in Fig 5. Stringers having area, $100mm^2$ are placed on median line around the circumference with wall thickness 0.8mm. If the fuselage is subjected to a positive bending moment, Mx = 200kNm applied in the vertical plane of symmetry and a Torque of 15kNm,calculate the direct stress and the shear flow distribution. (Idealize the structure assuming skin between adjacent stringers is flat.) **08**

6. a. State the strain energy expressions for the following loadings: **04**

i. Tensile load acting on a uniform bar.

ii. Flexure of a beam having non-uniformproperties and varying bending moment along the beam.

iii. Torsion of a thin walled closed section beam.

iv. Shear flow q on a rectangular panel.

b. Derive twist angle per unit length and hence Torsion constant, J for a closed single cell thin walled section. Determine J, for a thin walled square cross section.(Fig: 6) **10**

7. a. Using unit load method find the deflection at C, of the structure, shown in Fig. 7a. **06**

b. Determine Flexibility matrix [A] for the cantilever beam shown in Fig: 7b. and hence prove $[A] = [A]^T$ and verify Maxwell's Reciprocal Theorem. **08**

8. a. Explain how Flexibility Method is used for the solution of Statically Indeterminate Structures. **04**

b. Fig. 8.shows a cantilever beam having bending stiffness, E_bI_b carrying a uniform load supported by a cable having axial stiffness E_cA_c at the end . Determine the force in the cable. If the cable is infinitely rigid($E_cA_c \rightarrow \infty$) what is the reaction at the cable support? **10**

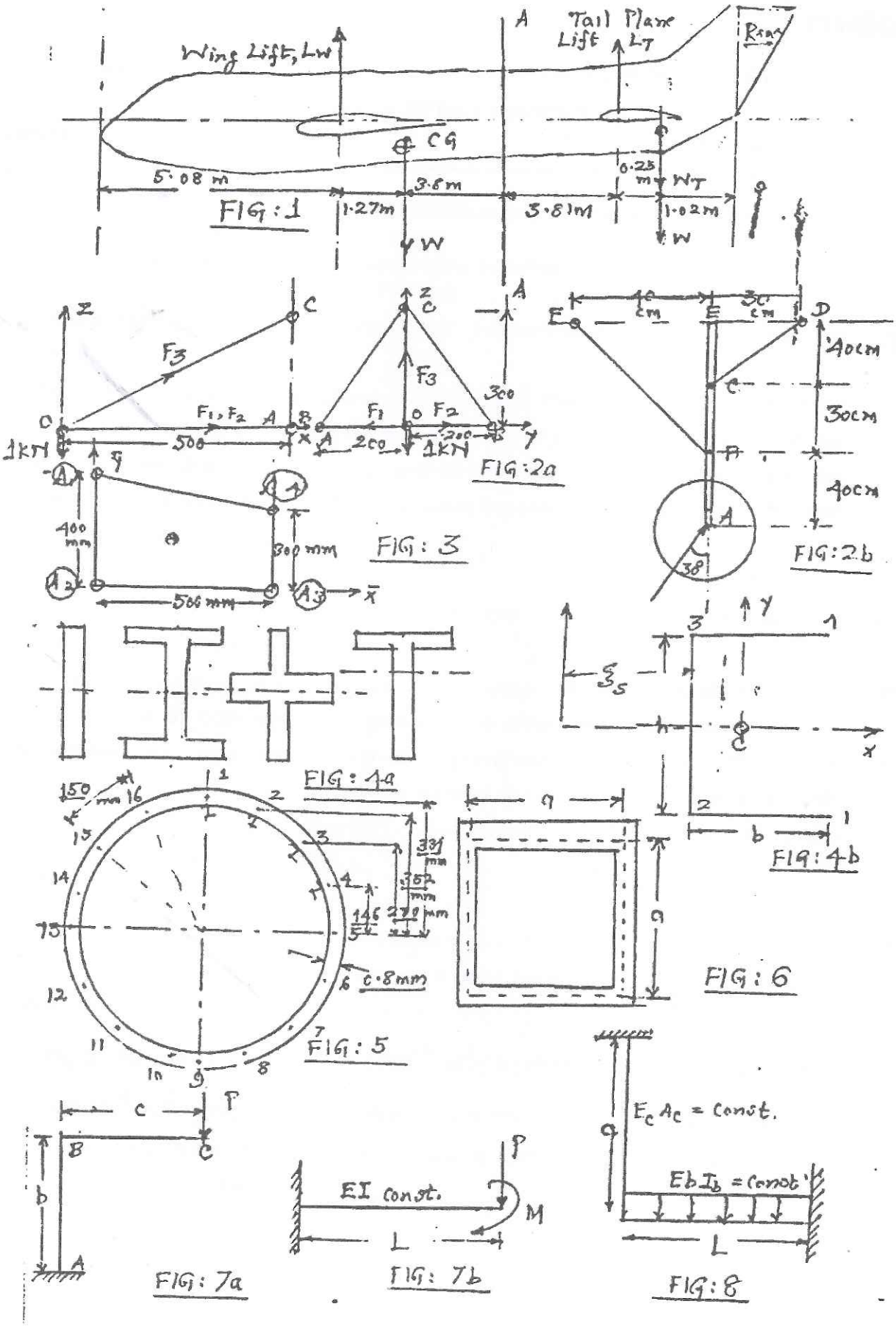
Wing Lift, Lw
Tail Plane Lift LT
CG
5.08 m
3.6m
1.27m
3.81m
0.25 m
WT
W
FIG: 1
FIG: 2a
FIG: 2b
FIG: 3
FIG: 4a
FIG: 4b
FIG: 5
FIG: 6
FIG: 7a
FIG: 7b
FIG: 8
EI const.
Ec Ac = const.
Eb Ib = const.